GIGABIT SWITCH INDUSTRIAL

ORing

Quick Installation Guide

IGS-1082GP

Industrial Unmanaged Gigabit Switch

Introduction

The **IGS-1082GP** is a Gigabit unmanaged Ethernet switch with 8x10/100/1000Base-T(X) ports and 2x100/1000Base-X SFP ports, ideal for applications that demand high bandwidth. The device support a wide range power input between 12~48VDC to satisfy the demands of devices. Configuration of SFP speed is made easy with a 4-pin DIP switch which can also be set to send power failure alerts. With a wide operating temperature range from -40˚C to 75˚C and dual power inputs, the devices can work perfectly in harsh environments.

Package Contents

The device is shipped with the following items. If any of these items is missing or damaged, please contact your customer service representative for assistance.

Contents	Pictures	Number
IGS-9042GP		X 1
DIN-rail Kit		X 1
Wall-mount Kit	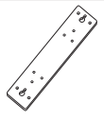	X 1
QIG		X 1

Preparation

Before you begin installing the switch, make sure you have all of the package contents available and a PC with Microsoft Internet Explorer 6.0 or later, for using web-based system management tools.

Safety & Warnings

Elevated Operating Ambient: If installed in a closed or multi-unit rack assembly, the operating ambient temperature of the rack environment may be greater than room ambient. Therefore, consideration should be given to installing the equipment in an environment compatible with the maximum ambient temperature (Tma) specified by the manufacturer.

Reduced Air Flow: Installation of the equipment in a rack should be such that the amount of air flow required for safe operation of the equipment is not compromised

Mechanical Loading: Mounting of the equipment in the rack should be such that a hazardous condition is not achieved due to uneven mechanical loading.

Circuit Overloading: Consideration should be given to the connection of the equipment to the supply circuit and the effect that overloading of the circuits might have on overcurrent protection and supply wiring. Appropriate

Dimension

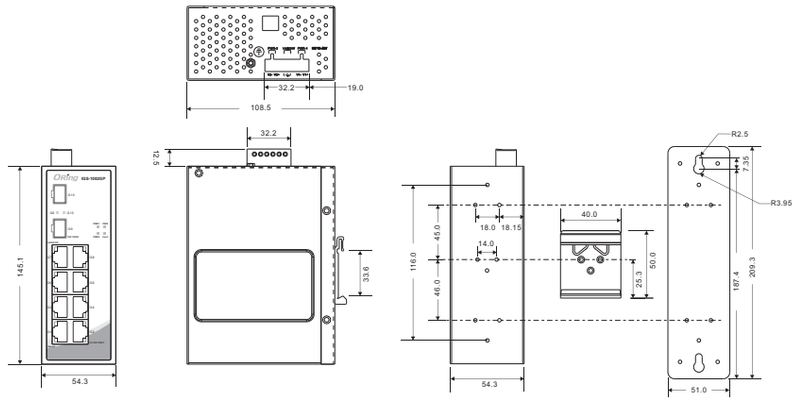

Panel Layouts

Front View

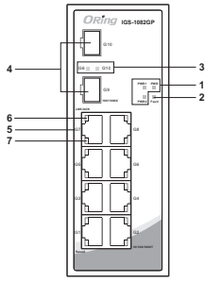

1. Power status LED
2. Fault LED
3. LNK/ACT LED for SFP modules
4. SFP Ports
5. Gigabit LAN ports
6. Link/Act LED for Gigabit LAN ports
7. Speed LED for Gigabit LAN ports

Rear View

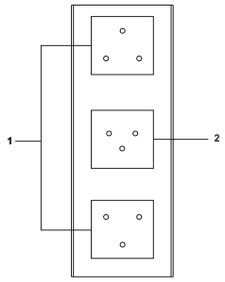

1. Wall-mount screw holes
2. Din-rail screw holes

Top Panel

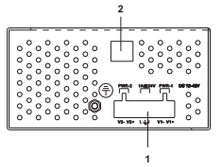

1. Terminal blocks: PWR1, PWR2 , Relay
2. DIP switch

Installation

DIN-rail Installation

Step 1: Slant the switch and screw the Din-rail kit onto the back of the switch, right in the middle of the back panel.
Step 2: Slide the switch onto a DIN-rail from the Din-rail kit and make sure the switch clicks into the rail firmly.

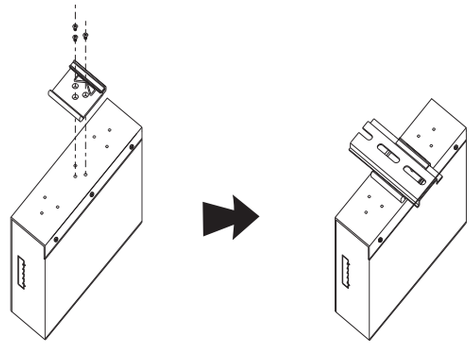

Wall-mounting

Step 1: Screw the wall-mount kit onto the rear panel of the switch. A total of six screws are required, as shown below.
Step 2: Use the switch, with wall mount plates attached, as a guide to mark the correct locations of the four screws.
Step 3: Insert a screw head through the large parts of the keyhole-shaped apertures, and then slide the switch downwards. Tighten the screws for added stability.

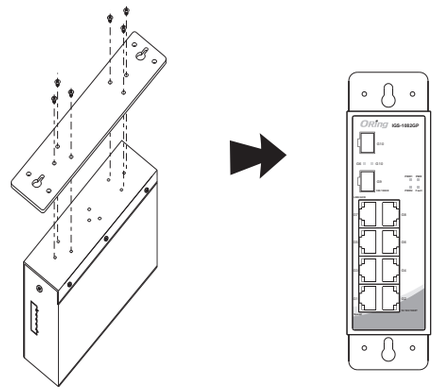

Dip Switch

DIP-Switch 1	Power-2 failed warning : (ON) enable, (OFF) disable
DIP-Switch 2	Power-1 failed warning : (ON) enable, (OFF) disable
DIP-Switch 3	DIP switch 3 and 4 (ON) : SFP speed setting to 100Mbps
DIP-Switch 4	DIP switch 3 and 4 (OFF) : SFP speed setting to 1000Mbps(default)

Network Connection

The switch provides standard Ethernet ports. According to the link type, the switch uses CAT 3,4,5,5e UTP cables to connect to any other network devices (PCs, servers, switches, routers, or hubs). Please refer to the following table for cable specifications.

GIGABIT SWITCH INDUSTRIAL

ORing

Quick Installation Guide

IGS-1082GP

Industrial Unmanaged Gigabit Switch

Cable Types and Specifications:

Cable	Type	Max. Length	Connector
10BASE-T	Cat. 3, 4, 5 100-ohm	UTP 100 m (328 ft)	RJ-45
100BASE-TX	Cat. 5 100-ohm UTP	UTP 100 m (328 ft)	RJ-45
1000BASE-T	Cat. 5 / Cat. 5e 100-ohm UTP	UTP 100 m (328 ft)	RJ-45

For pin assignments for different types of cables, please refer to the following tables.

10/100Base-T(X) RJ-45 Port	
Pin No.	Assignments
# 1	TD+
# 2	TD-
# 3	RD+
# 6	RD-

1000Base-T RJ-45 Port	
Pin No.	Assignments
# 1	BI_DA+
# 2	BI_DA-
# 3	BI_DB+
# 4	BI_DC+
# 5	BI_DC-
# 6	BI_DB-
# 7	BI_DD+
# 8	BI_DD-

10/100 Base-T(X) MDI/MDI-X		
Pin Number	MDI port	MDI-X port
1	TD+(transmit)	RD+(receive)
2	TD-(transmit)	RD-(receive)
3	RD+(receive)	TD+(transmit)
4	Not used	Not used
5	Not used	Not used
6	RD-(receive)	TD-(transmit)
7	Not used	Not used
8	Not used	Not used

1000Base-T MDI/MDI-X		
Pin Number	MDI port	MDI-X port
1	BI_DA+	BI_DB+
2	BI_DA-	BI_DB-
3	BI_DB+	BI_DA+
4	BI_DC+	BI_DD+
5	BI_DC-	BI_DD-
6	BI_DB-	BI_DA-
7	BI_DD+	BI_DC+
8	BI_DD-	BI_DC-

Note: "+" and "-" signs represent the polarity of the wires that make up each wire pair.

Wiring

Power inputs

The switch supports dual redundant power supplies, Power Supply1 (PWR1) and Power Supply 2 (PWR2). The connections for PWR1, PWR2 and the RELAY are located on the terminal block.

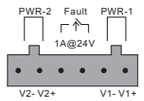

STEP 1: Insert the negative/positive wires into the V-/V+ terminals, respectively.

STEP 2: To keep the DC wires from pulling loose, use a small flat-blade screwdriver to tighten the wire-clamp screws on the front of the terminal block connector.

Relay contact

The two sets of relay contacts of the 6-pin terminal block connector are used to detect user-configured events. The two wires attached to the fault contacts form an close circuit when a user-configured event is triggered. If a user-configured event does not occur, the fault circuit remains opened.

Grounding

Grounding and wire routing help limit the effects of noise due to electromagnetic interference (EMI). Run the ground connection from the ground screws to the grounding surface prior to connecting devices.

Configurations

After installing the switch, the green power LED should turn on. Please refer to the following tablet for LED indication.

LED	Color	Status	Description
PW	Green	On	Power is on
PW1	Green	On	DC power module 1 activated
PW2	Green	On	DC power module 2 activated
Fault	Amber	On	Errors occur
Gigabit Ethernet ports			
ACT/LNK	Green	On	Port is connected
Speed	Green	On	Port runs at 1000Mbps
	Amber	On	Port runs at 100Mbps
	Green/Amber	Off	Port runs at 10Mbps
SFP ports			
LNK/LNK	Green	On	Port is connected

Specifications

ORing Switch Model	**IGS-1082GP**
Physical Ports	
10/100/1000Base-T(X) Ports in RJ45 Auto MDI/MDIX	**8**
100/1000Base-X with SFP port	**2**
Technology	
Ethernet Standards	IEEE 802.3 for 10Base-T IEEE 802.3u for 100Base-TX and 100Base-FX IEEE 802.3ab for 1000Base-T IEEE 802.z for 1000Base-X IEEE 802.3x for Flow control
MAC Table	8K
Processing	Store-and-Forward
Switch Properties	Switch latency: 7 us Switch bandwidth: 12Gbps
Jumbo frame	Up to 9.6K Bytes
Packet buffer	4Mbit
LED Indicators	
Power Indicator (PWR)	Green : Power LED x 3
Fault Indicator (Fault)	Amber : Indicate power failed even warning
10/100/1000Base-T(X) RJ45 Port Indicator	Green for port Link/Act. Dual color LED for speed indicator ~ Green for 1000Mbps / Amber for 100Mbps / off-light for 10Mbps
100/1000Base-X SFP Port Indicator	Green for port Link/Act.
DIP Switch	
DIP-Switch 1	Power-2 failed warning : (ON) enable, (OFF) disable
DIP-Switch 2	Power-1 failed warning : (ON) enable, (OFF) disable
DIP-Switch 3	DIP switch 3 and 4 (ON) : SFP speed setting to 100Mbps
DIP-Switch 4	DIP switch 3 and 4 (OFF) : SFP speed setting to 1000Mbps(default)
Fault Contact	
Relay	Relay output to carry capacity of 1A at 24VDC
Power	
Redundant Input power	Dual DC inputs. 12-48VDC on 6-pin terminal block
Power consumption(Typ.)	10 Watts
Overload current protection	Present
Reverse Polarity Protection	Present
Physical Characteristic	
Enclosure	IP-30
Dimension (W x D x H)	54.3(W)x108.5(D)x145.1(H) mm (2.13x4.27x5.71 inch.)
Weight (g)	837 g

Environmental	
Storage Temperature	-40 to 85°C (-40 to 185°F)
Operating Temperature	-40 to 75°C (-40 to 167°F)
Operating Humidity	5% to 95% Non-condensing
Regulatory Approvals	
EMC	En55032, EN55024(CE EMC), FCC Part 15B, EN61000-3-2, EN61000-3-3
EMI	CISPR 32, EN55032, FCC Part 15B class A
EMS	IEC 61000-4-2 (ESD), IEC 61000-4-3 (RS), IEC 61000-4-4 (EFT), IEC 61000-4-5 (Surge), IEC 61000-4-6 (CS), IEC 61000-4-8 (PFMF), IEC 61000-4-11 (DIP)
Shock	IEC60068-2-27
Free Fall	IEC60068-2-32
Vibration	IEC60068-2-6
Safety	EN60950-1 compliant
Warranty	5 years
MTBF (hrs)	722009hrs

ORing

ORing Industrial Networking Corp.
TEL: +886-2-2218-1066 Website: www.oringnet.com
FAX: +886-2-2218-1014 E-mail: support@oringnet.com